Proton 3PS Digital Mixing Valve

1. Proton Digital Mixing Valve

   A. PNV-3PS models shall:
      1. Have inlet and outlet NPT female connections
      2. Have integral stop/check valves
      3. Have 2-line, 16-character LED display
      4. Have Integral RTD Sensor
      5. Have maximum Operating Pressure no greater than 200 PSI
      6. Maintain temperature with .25 GPM flow from the domestic hot water loop
      7. Be certified to ASSE standard 1017 and CSA B125.3-18 and so certified and identified
      8. Be cULus listed and identified

   B. PNV-3PS shall have all the following operational capabilities:
      1. Daily shuttle sweep designed to prevent scale buildup on internal mechanical components
      2. +/- 2˚F water temperature control at times of use and no demand
      3. Self-balancing and does not need to have recirculation balanced or adjusted
      4. Automatic shutoff of hot water upon cold water inlet supply failure
      5. Automatic shutoff of cold water upon hot water inlet supply failure
      6. Maintain last control position in the event of power failure or be equipped with UPS standby power for approximately 2 hour run time
      7. Programmable set point range of 65-180˚F (18-82˚C)
      8. Simple/intuitive user commissioning and setup
      9. ETL Listed control box and 120v plug in power supply with 6’ cord

   C. Maximum Operating Pressure shall be no greater than 125 PSI

   D. Disinfection Option with Proton Box 2.0
      a. Optional 3T (3 additional temperature probes for hot and cold inlet in addition to return)
      b. Optional REL (Connectivity for 5 relay states)

   E. BMS connectivity available with Proton 2.5 box utilizing BACnet MS/TP connection in addition to including Disinfection
      a. Optional 3T (3 additional temperature probes for hot and cold inlet in addition to return)
      b. Optional REL (Connectivity for 5 relay states)

   F. Wi-Fi Connectivity is available with Proton 3.0 box in addition to BACnet MS/TP connection, Disinfection, relay, and 3 additional temperature probes for hot and cold inlet in addition to return

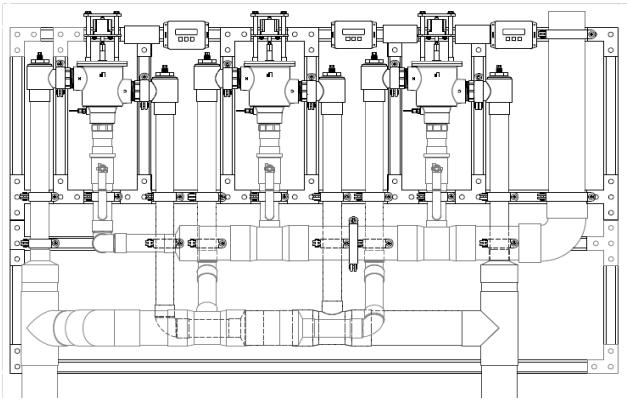

		PRESSURE DROP (PSI)									
MODEL # Inlet/Outlet	Minimum Flow*	5 PSI	10 PSI	15 PSI	20 PSI	25 PSI	30 PSI	35 PSI	40 PSI	45 PSI	50 PSI
PNV200LF-3PS 4”x 4”	15 GPM	240	345	390	441	495	519	567	594	645	678
PNV300LF-3PS 6” x 6”	30 GPM	291	405	489	573	639	705	786	864	888	909
Flow in Gallons per Minute (GPM)											
Valves should be sized based on a 5 to 10 PSI pressure drop											